CREATING THE POWERON AND POWEROFF SECTIONS

1) Automatic generation during the Create Program

The usual way to add the POWERON and POWEROFF sections into a program is during the “Create Program” phase. The section will be generated automatically following the command sequence below.

Note: Creating a program, reset all the debug information. So if the program has been debugged and a POWERON/POWEROFF section must be added, then refer to the next paragraph.

In the *Create Program* Tab, Push the button *Advanced.* In the *Advanced Create Program Setting* dialog box’ Tick the *Power on the Board* checkbutton. Confirm with OK	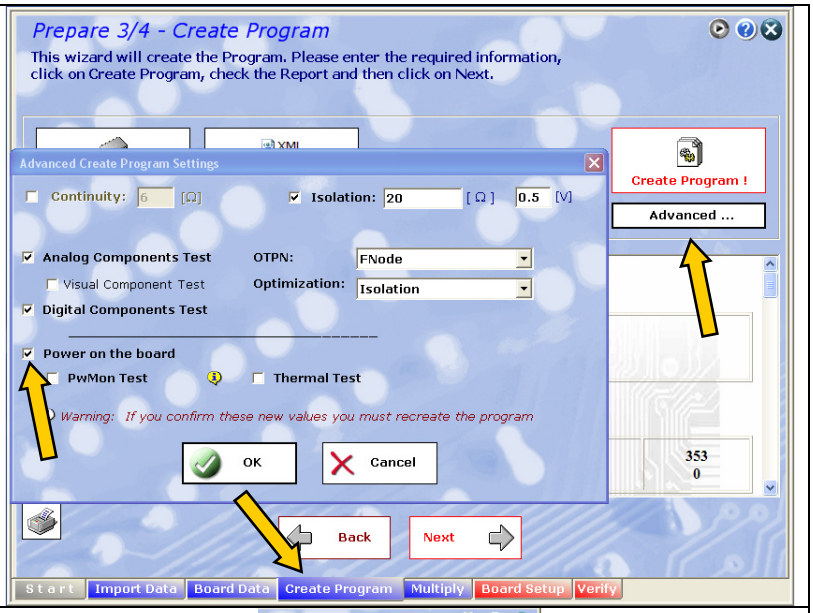
Run the program creation, pushing the button *Create Program !*	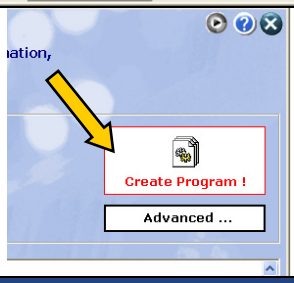
When the program generation is completed switching to the *Debug Enviroment* In the program grid, the two sections POWERON and POWEROFF have been created. Between sections “POWERON” and “POWEROFF” will be included those tests on components which require to power up the UUT (with user power supplies). Other tests can be moved or created within these sections.	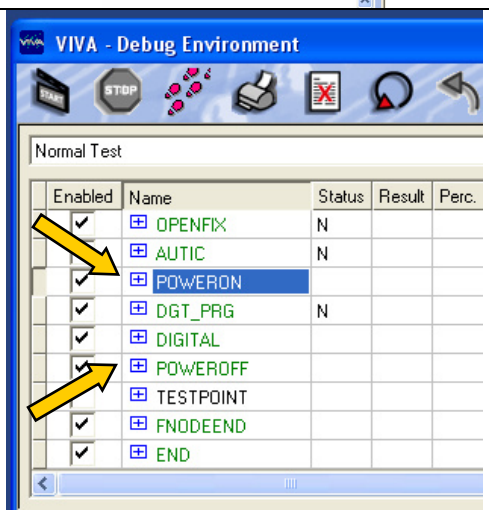

2) Manual creation in the program grid of the Debug Enviroment

It is possible to add the POWERON and POWEROFF sections in a program without recreating the program. This will avoid to lose debug data or autolearnt data.
The sections can be created with the following sequence of commands.

In the VIVA Debug Enviroment, Select the last section of the ICT test, in the program grid	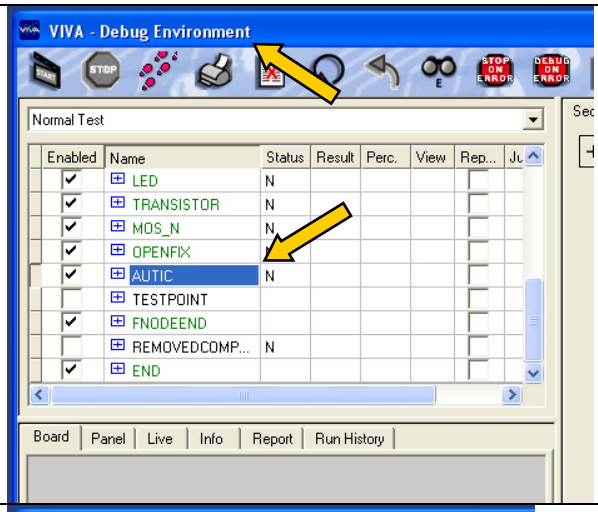
Right click on the selected Section, and from the contextual menu, Choose “Add”, and then Choose “ Section”	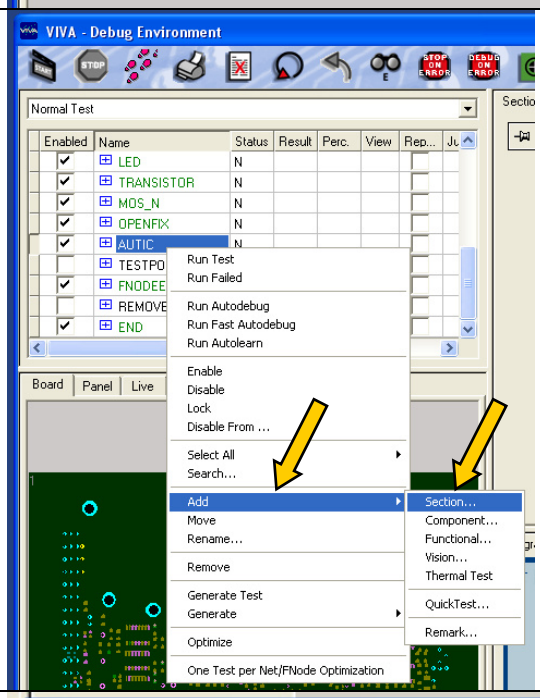
In the *Add Section* Dialog Box Write POWERON in *Section name* field Confirm with Add	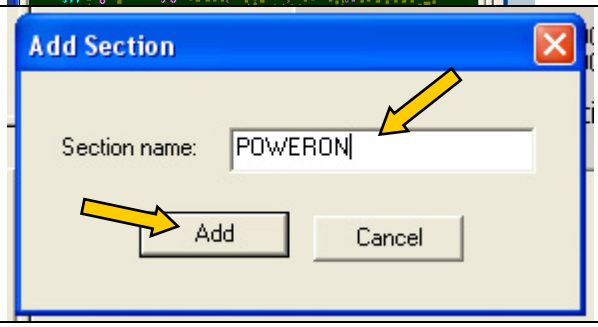

The section *POWERON* is created in the program grid.
Select it, then rightclick on it, form the contextual menu
Choose *Add*, and then
Choose *Component*

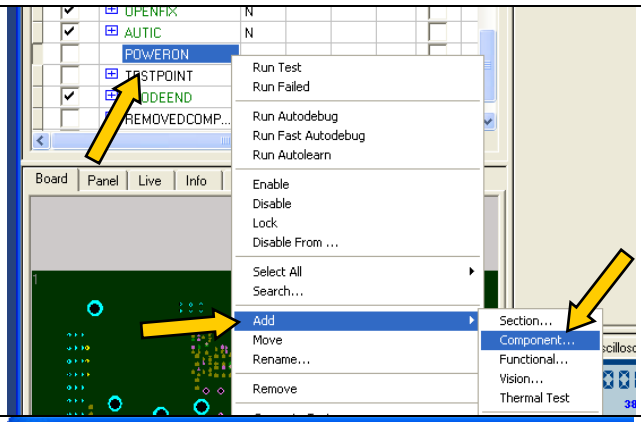

The *Add Items Wizard* dialog box opens.

In the *New Component Name:* field,
Write POWERON_COMP

Then push the Device pushbutton

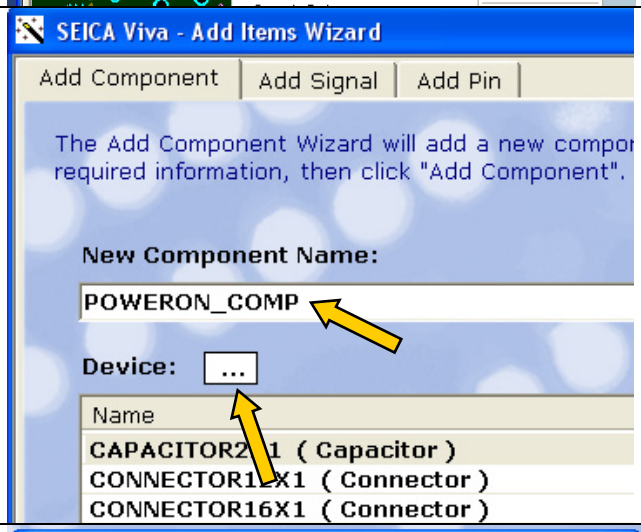

The *Add New Device* dialog box opens.

In the *New Device:* field
Write VIVA_POWERON_DEVICE
And select the associated Function
PowerOn

Confirm with

Then complete with

And exit the *Add Items Wizard*

with

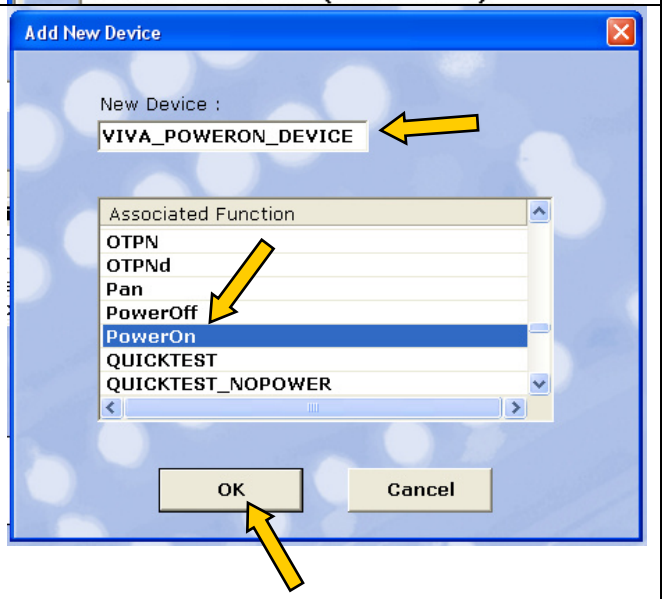

In the program grid, The POWERON Section has been created; It contains the component POWERON_COMP; The macro POWER has been assigned to the new component. Changing the parameters of the POWER macro, the power supplies will be programmed and switched on	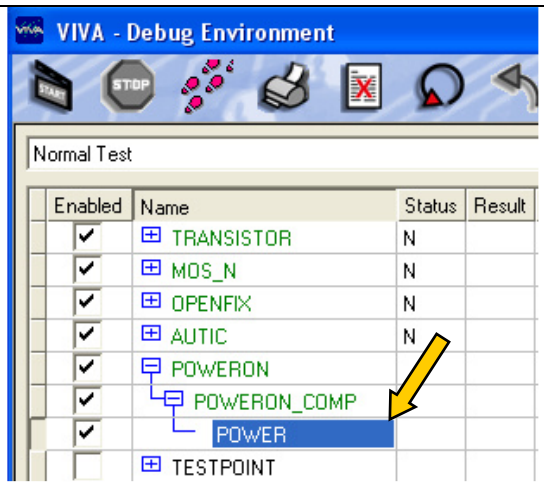
To add the POWEROFF section a similar sequence can be executed. Select the POWERON Section, Right click on it, and from the contextual menu, Choose “Add”, and then Choose “ Section”	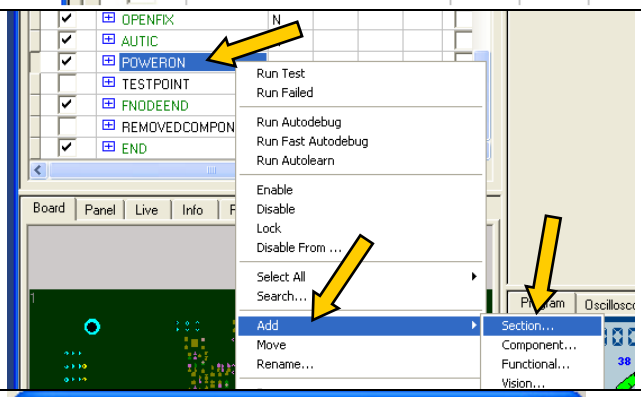
In the *Add Section* Dialog Box Write POWEROFF in *Section name* field Confirm with Add	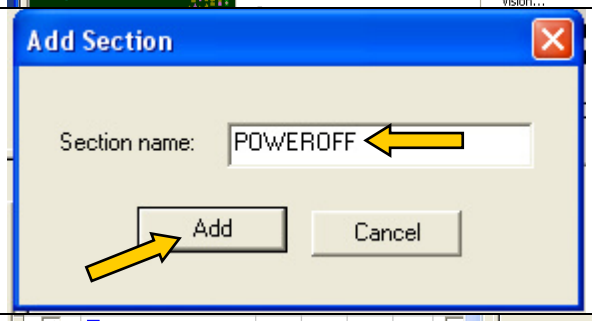
The section *POWEROFF* is created in the program grid. Select it, then rightclick on it, form the contextual menu Choose *Add*, and then Choose *Component*	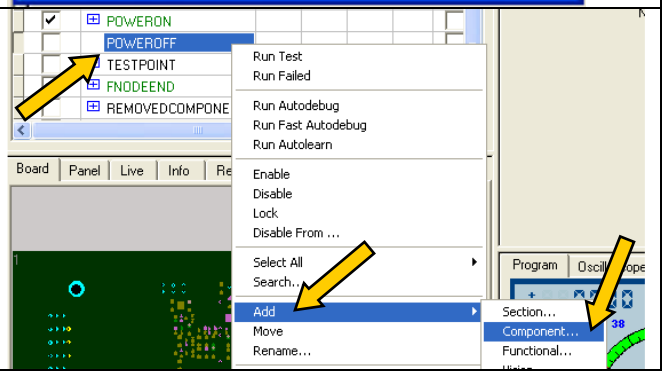

The *Add Items Wizard* dialog box opens. In the *New Component Name:* field, Write POWEROFF_COMP Then push the Device pushbutton ...	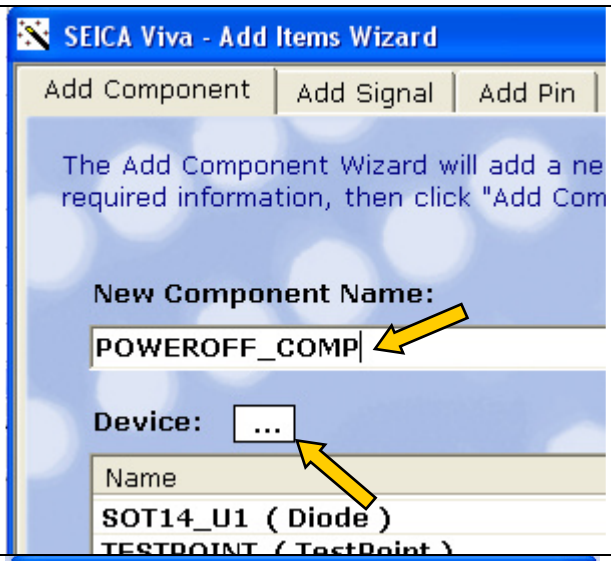
The *Add New Device* dialog box opens. In the *New Device:* field Write VIVA_POWEROFF_DEVICE And select the associated Function PowerOff Confirm with OK Then complete with Add Component And exit the *Add Items Wizard* with Close	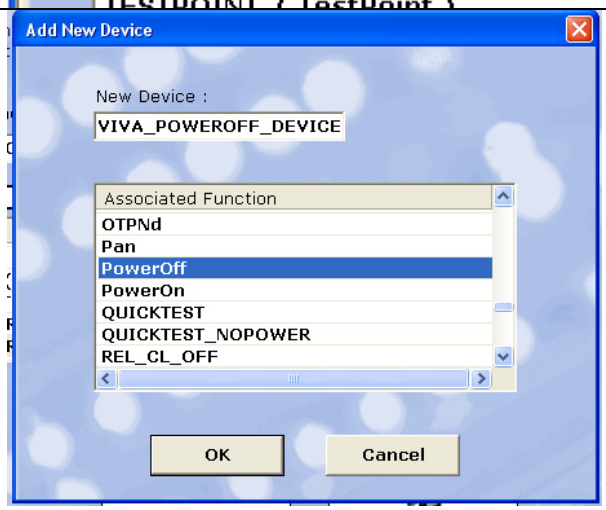
The POWEROFF Section has been created; It contains the component POWEROFF_COMP; The macro POWER has been assigned to the new component. Changing the parameters of the POWER macro, the Power supplies will be switched off	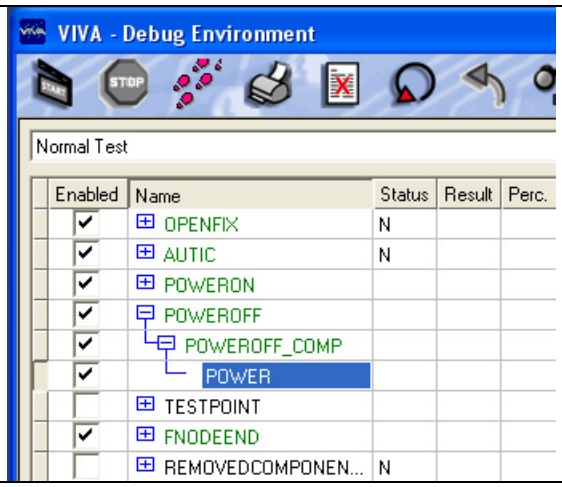

Between the POWERON and POWEROFF Sections it is possible to create or move all those components and test to be executed with the board powered up.

SWITCHING THE POWER SUPPLIES ON AND OFF

To switch on the power supplies

In Debug Enviroment

1) In the section **POWERON**
2) Select the macro POWER to visualize the parameters
3) Disable *View MEMO parameters* and enable *View Optional Parameters* to visualize the macro parameters

Set the parameter PowerMode to **ON**

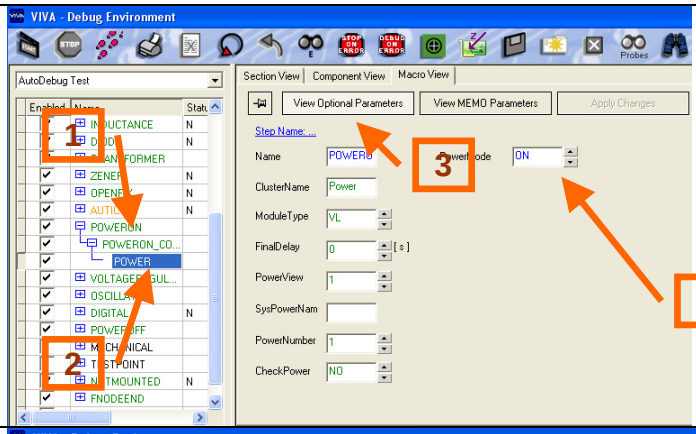

In Debug Enviroment

1) In Section **POWERON**
2) Select the macro POWER to visualize the parameters
3) Enable *View MEMO parameters* to visualize the configuration of the power supply
4) Open the programming parameters for the power supply PWn and introduce the correct values.

The parameter SET must be set to **ON**

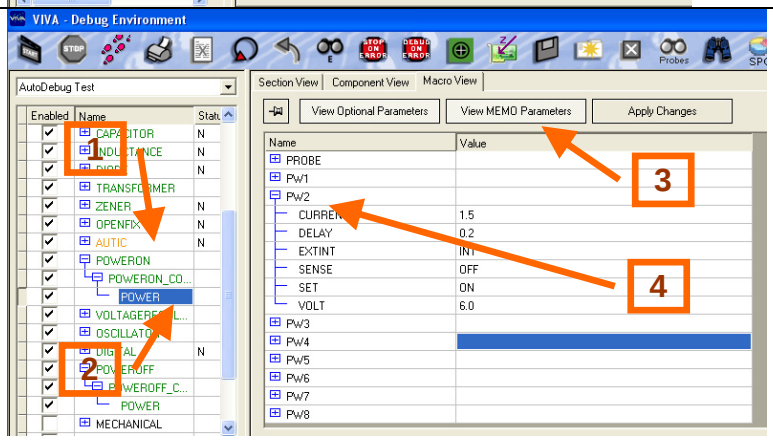

To switch off the power supply

In Debug Enviroment

1) In section **POWEROFF**
2) Select the macro POWER to visualize the macro parameters
3) Disable *View MEMO parameters* and enable *View Optional Parameters* to visualize the macro parameter

Set the parameter PowerMode to **OFF**

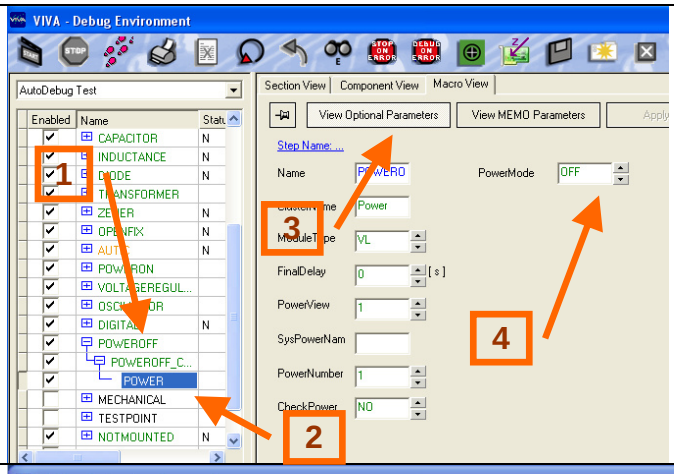

In Debug Enviroment

1) In section **POWEROFF**
2) Select the macro POWER to visualize the parameters
3) Enable *View MEMO parameters* to visualize the configuration of power supplies
4) Open the programming parameters for the power supply PWn and introduce the same parameters introduced in the POWERON Section.

The parameter SET must be set to **ON**

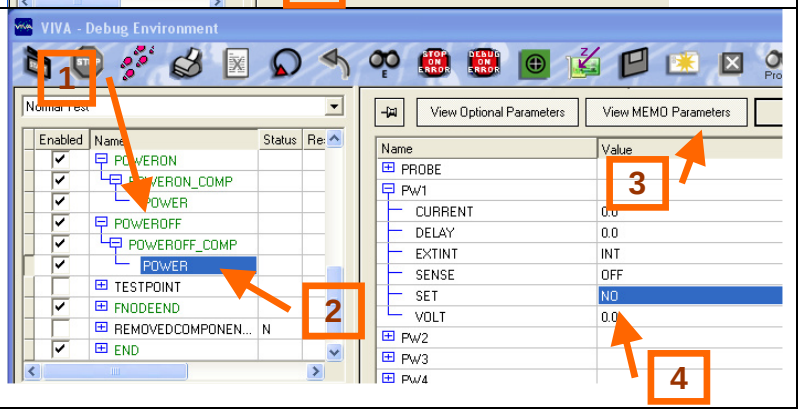

PROGRAMMING THE POWER SUPPLIES

Each power supply of the system can be programmed using the following parameters:

PARAMETER	RANGE	DESCRIPTION
CURRENT	0- Max current of Power supply	Maximum current that will be supplied by the power supply. It is used to avoid to overload a board. If this current limit is reached, the power supply clamp the voltage in order to avoid to overcome the limit. Expressed in [A]
DELAY	0 - n	It is the delay time after the power on of power supplies. When the macro POWER is executed and the power supplies are switched on, the delay represent how much time passes before the next instruction is executed. Expressed in [s] Typical values: - 0.2 to 1 [s] when power on board for electrical test - 30 to 600 [s] when power on board for thermal test
EXTINT	EXT- INT	Typical value INT: the accessory box is connected to the system power supplies with internal connections. (EXT if external power supplied are used.)
SENSE	OFF-ON	Indicates whether the power supplies has sense wires cabled to have a feedback about the supplied voltage
SET	NO – ON - OFF	Indicates the management mode set for the specific power supply when the macro POWER is executed. ON: The specific power supply can be powered on/off when executing the POWER macro OFF: The specific power supply is always powered off when executing the POWER macro NO: The specific power supply is not managed when executin the POWER macro.
VOLT	0 – Max Voltage of Power supply	Voltage supplied by the power supply when it is on. Expressed in [V]

Example of programming parameters according to various situation are given later in this note.

To modify the programming parameters of power supplies follow the sequence below.

In Debug Enviroment

1) In Section **POWERON**
2) Select the macro POWER to visualize the parameters
3) Enable *View MEMO parameters* to visualize the configuration of the power supply

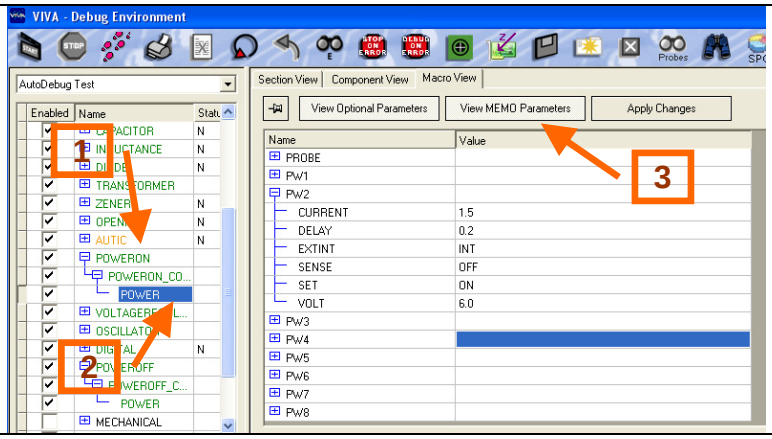

1) Open the programming parameters for the power supply PWn and introduce the correct values;
2) Modify the programming parameters;
3) Confirm the values with “Apply Changes”

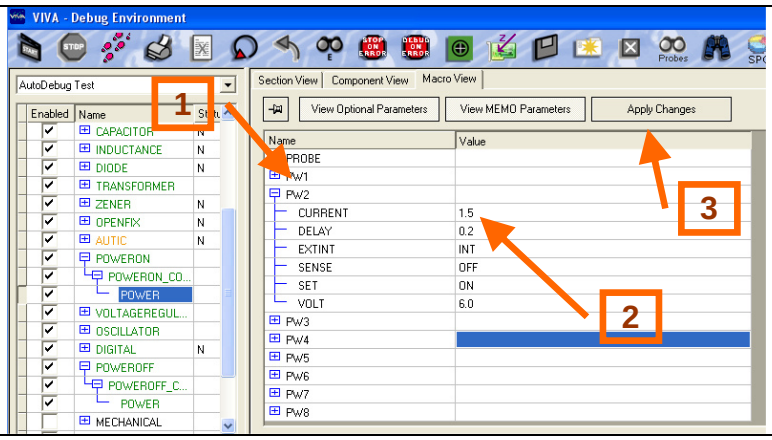

CABLING AND PROGRAMMING EXAMPLES

EXAMPLE 1

Supply 5V 2 A To the UUT
No Sense

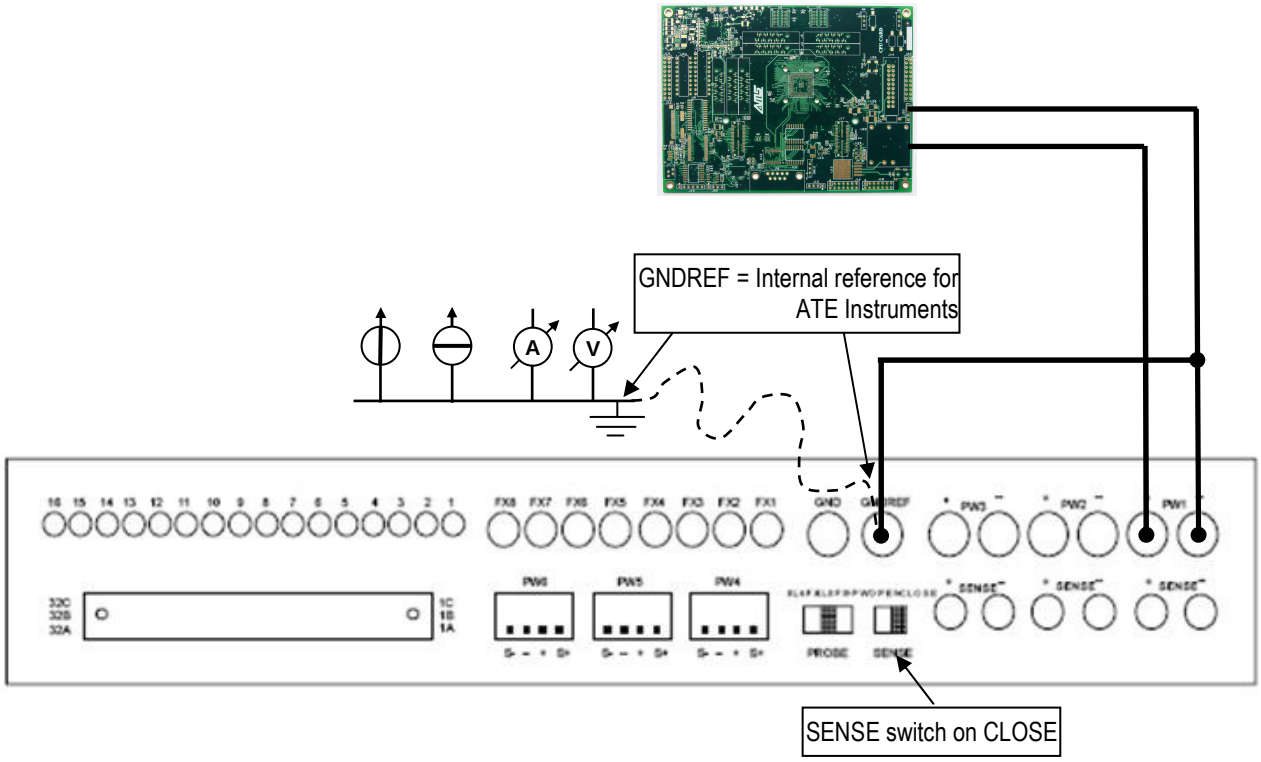

POWER SUPPLIES PARAMETERS

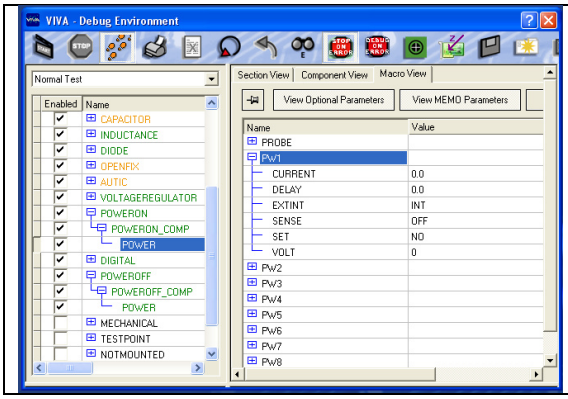

	PW1	PW2	PW3
CURRENT	2	0	0
DELAY	.2	0	0
EXTINT	INT	INT	INT
SENSE	OFF	OFF	OFF
SET	ON	NO	NO
VOLT	5	0	0

EXAMPLE 2

Supply 15V 1 A To the UUT
With Sense

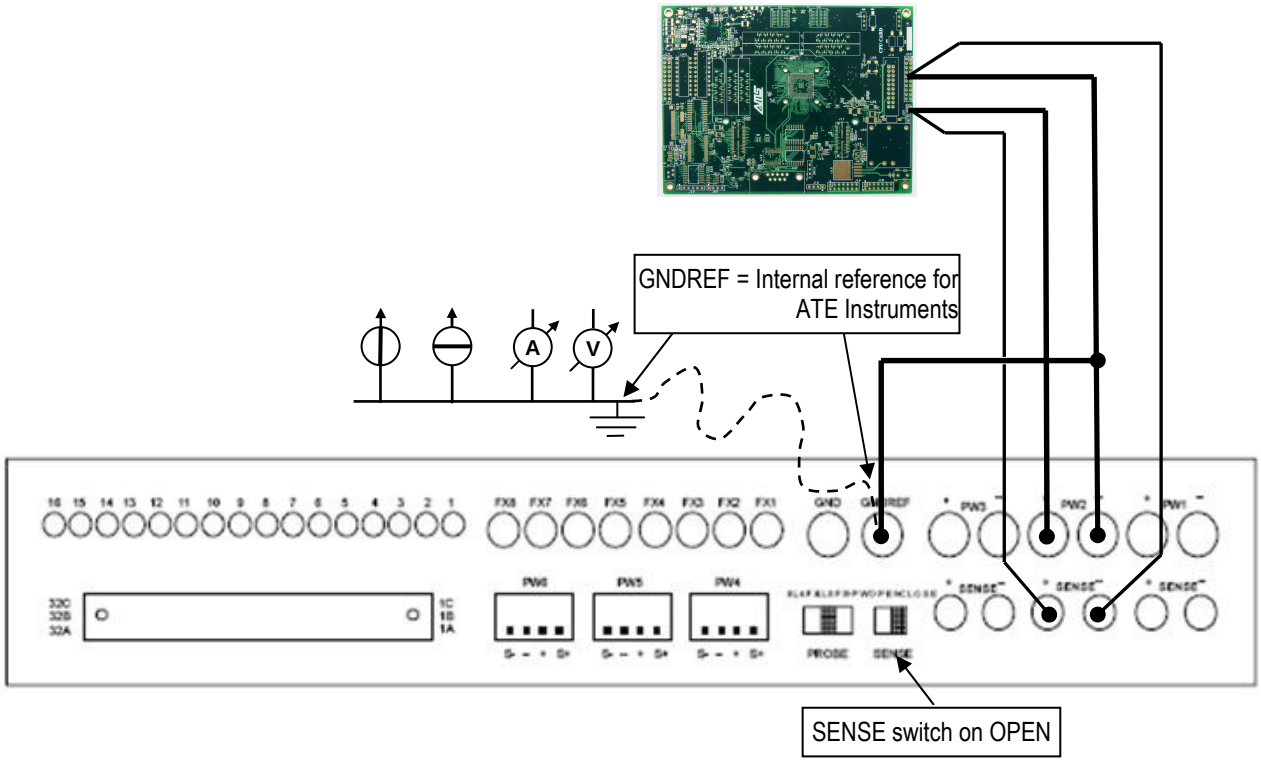

POWER SUPPLIES PARAMETERS

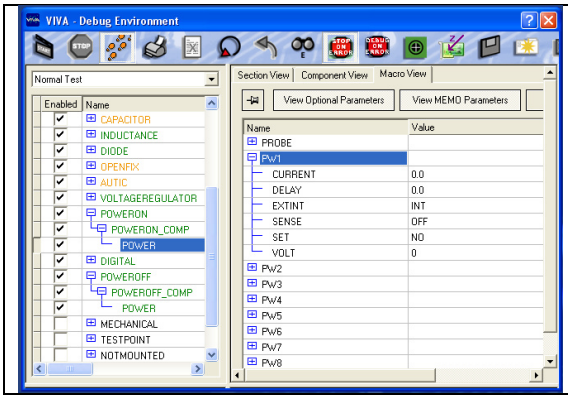

	PW1	PW2	PW3
CURRENT	0	1	0
DELAY	0	0.2	0
EXTINT	INT	INT	INT
SENSE	OFF	ON	OFF
SET	NO	ON	NO
VOLT	0	15	0

EXAMPLE 3

Supply 15V 1.2 A and -12V 0.8A To the UUT
With No Sense

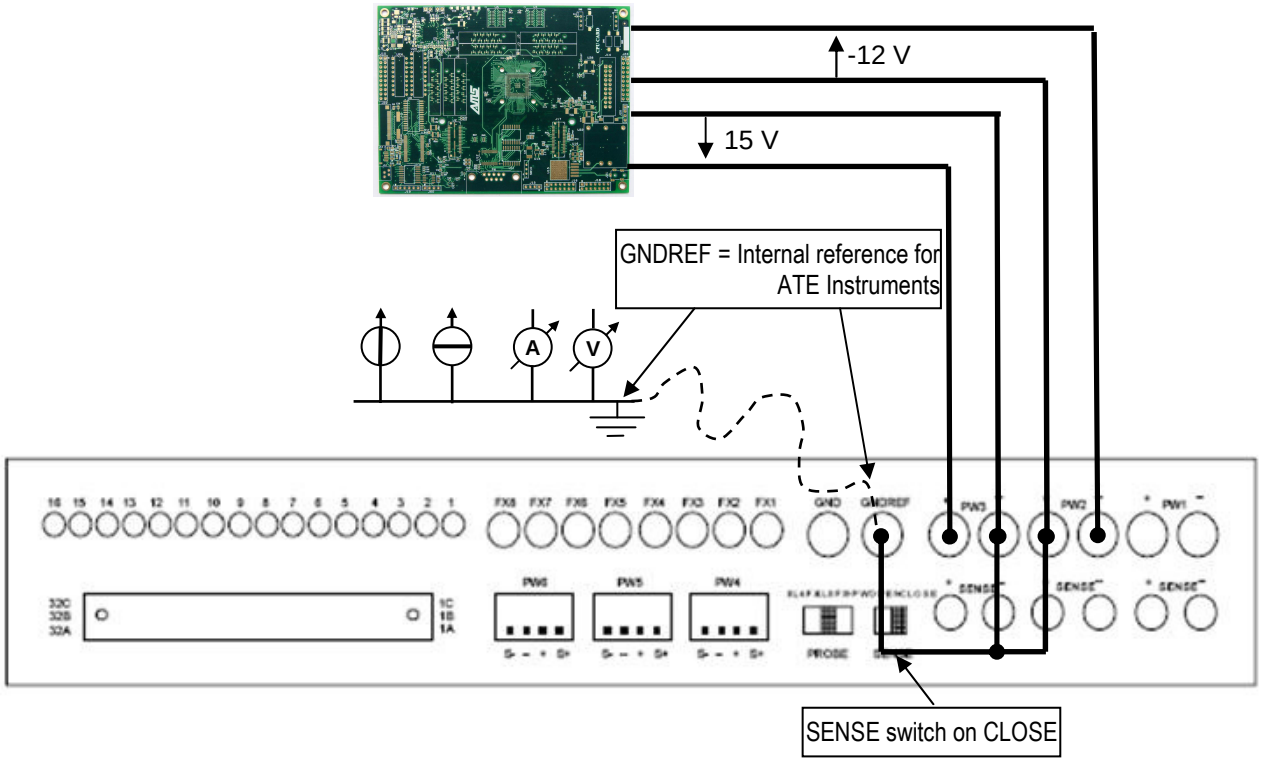

POWER SUPPLIES PARAMETERS

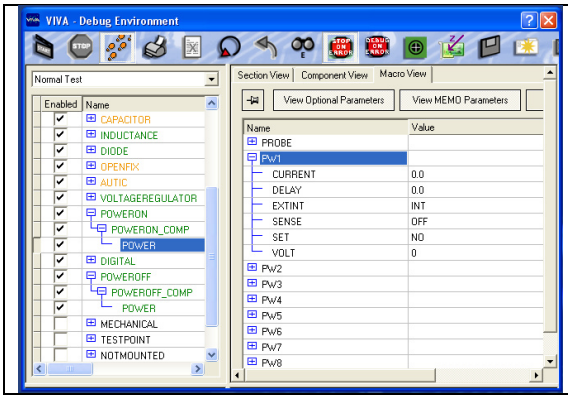

	PW1	PW2	PW3
CURRENT	0	0.8	1.2
DELAY	0	0.2	0.2
EXTINT	INT	INT	INT
SENSE	OFF	OFF	OFF
SET	NO	ON	ON
VOLT	0	12	15

EXAMPLE 4

Supply 30V 1 A
With No Sense

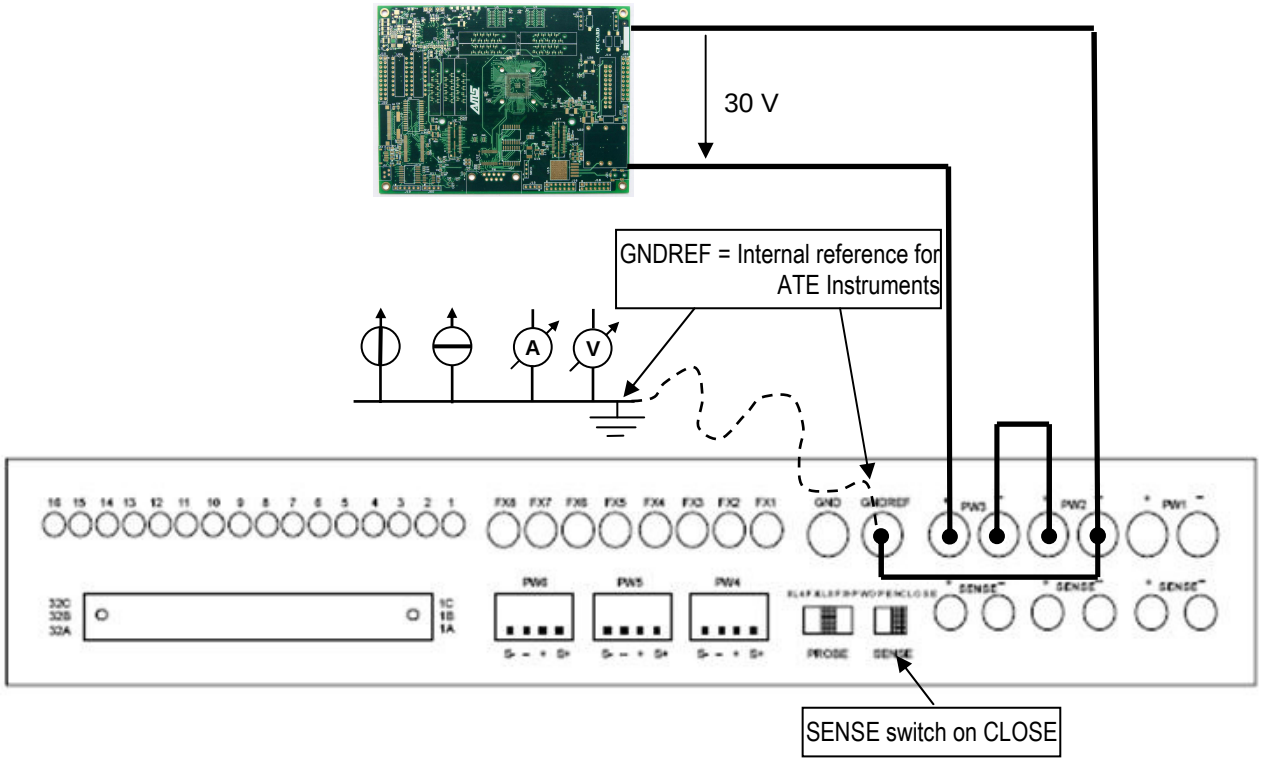

POWER SUPPLIES PARAMETERS

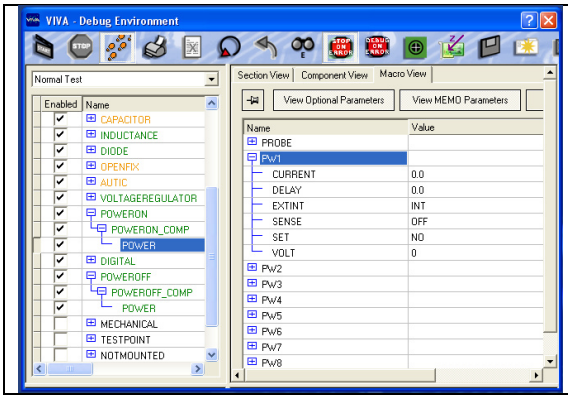

	PW1	PW2	PW3
CURRENT	0	1	1
DELAY	0	0.2	0.2
EXTINT	INT	INT	INT
SENSE	OFF	OFF	OFF
SET	NO	ON	ON
VOLT	0	15	15

EXAMPLE 5

Supply 36V 0.5 A ; -5V 5A;
With Sense

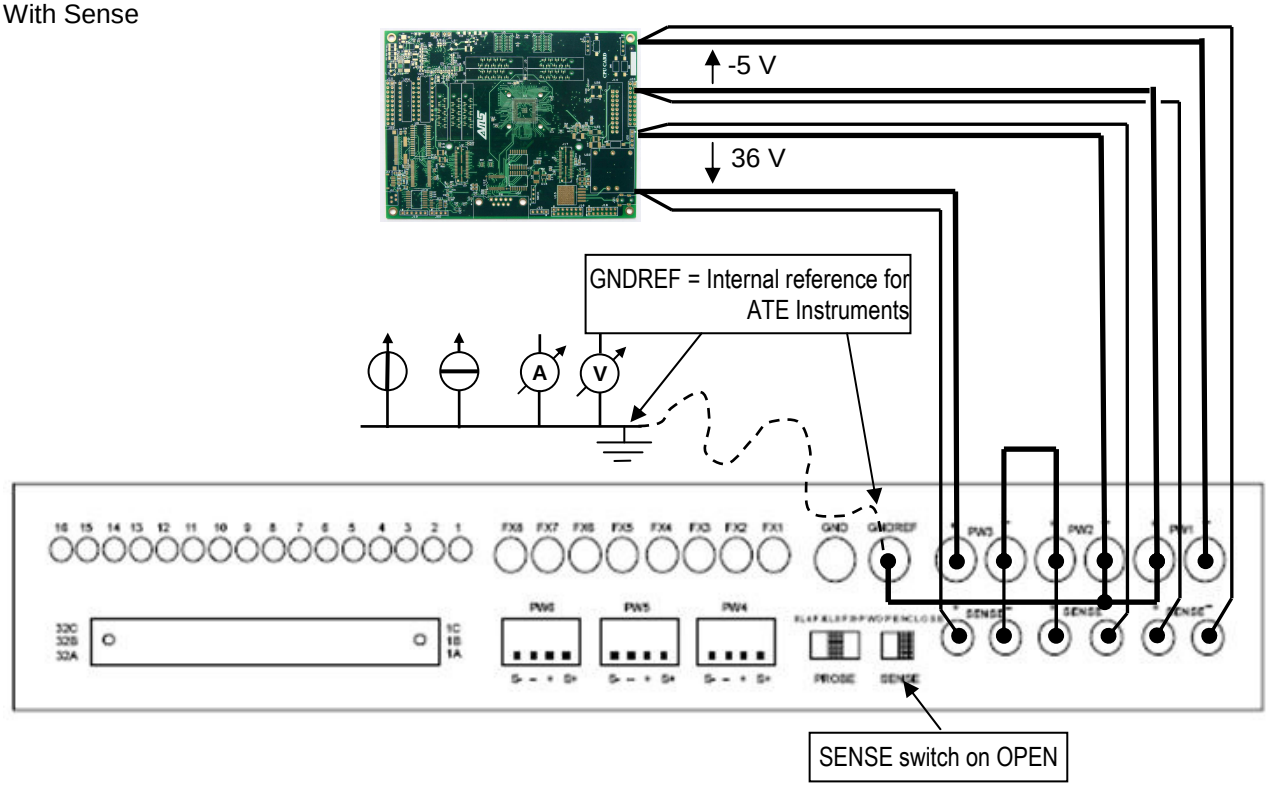

POWER SUPPLIES PARAMETERS

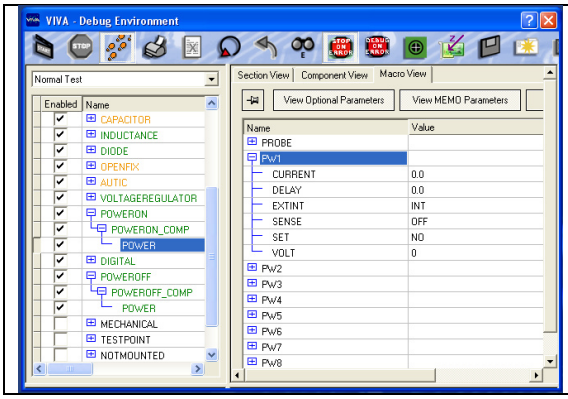

	PW1	PW2	PW3
CURRENT	5	18	18
DELAY	0.2	0.2	0.2
EXTINT	INT	INT	INT
SENSE	ON	ON	ON
SET	ON	ON	ON
VOLT	5	18	18